Specification Sheet For T111G Safety Glasses

Item Number:	T111G	Series:	Triwear
Description:	Triwear Onyx Frame, Emerald Lens with Black Cord	Features:	Black rubber temple sleeve Gel nose piece Breakaway cord Satin carrying case Duramass® scratch resistant coating Meets or exceeds ANSI Z87.1+ standard
Benefits:	Padded, more comfortable fit w/ area to attach breakaway cord Padded for greater fit To keep glasses in reach when not in use Case can be used to clean glasses or store when not in use For superior resistance to scratches Meets the ANSI standards for high impact	Case Pack:	144
		Weight:	1.890
		Case Weight:	272.16

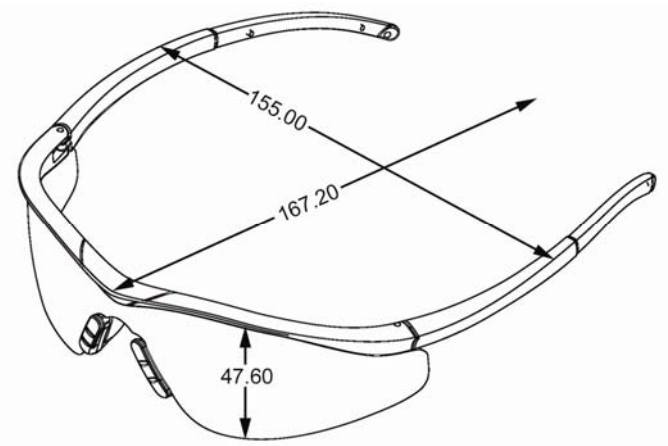

Materials

Frames		Lens	
Material:	Nylon	Material	Polycarbonate
Temples:	Bayonet	Coatings:	Duramass® scratch resistant
Color:	Onyx	Colors:	SEE BELOW
Options:	Steel	Options:	

More Information

Available Lens:	Clear:		Clear Anti-Fog:	X
	Grey:		Grey Anti-Fog:	X
	Fire:	X	Brown Anti-Fog:	
	Amber:		Silver Mirror:	X
	Indoor/Outdoor Clear Mirror AF:	X	Rainbow Mirror:	
	IR 3.0 Green:	X	Red Mirror:	
	IR 5.0 Green:	X	Emerald:	X
	Blue Diamond:		Vermilion:	
Country of Origin:	Taiwan			
Ratings:	Meets or Exceeds ANSI Z87.1+ Safety Standards.			